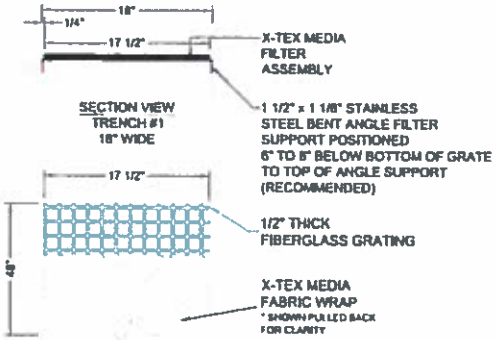

SECTION VIEW
TRENCH #1
18" WIDE

PLAN VIEW
FIBERGLASS GRATE
WITH X-TEX MEDIA

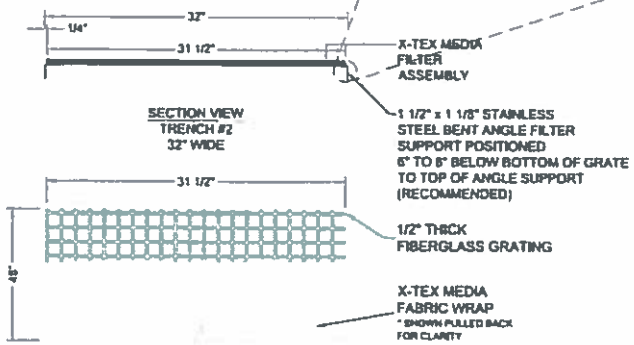

SECTION VIEW
TRENCH #2
32" WIDE

PLAN VIEW
FIBERGLASS GRATE
WITH X-TEX MEDIA

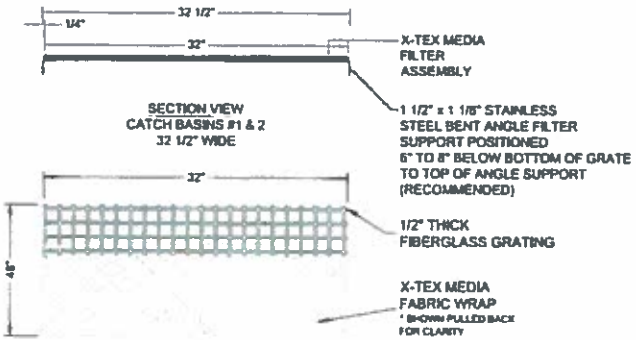

SECTION VIEW
CATCH BASINS #1 & 2
32 1/2" WIDE

PLAN VIEW
FIBERGLASS GRATE
WITH X-TEX MEDIA

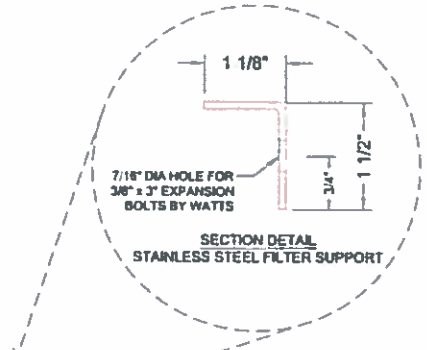

SECTION DETAIL
STAINLESS STEEL FILTER SUPPORT

TRENCH #1A
(40 PAIR) OF 8'-0" FILTER SUPPORTS SECTIONS
(1 PAIR) OF 4'-6" FILTER SUPPORT SECTIONS
TOTAL = 324'-6"
(82) 48" X-TEX FILTER MEDIA COVERS

TRENCH #1B
(23 PAIR) OF 8'-0" FILTER SUPPORTS SECTIONS
(1 PAIR) OF 5'-6" FILTER SUPPORT SECTIONS
TOTAL = 189'-6"
(48) 48" X-TEX FILTER MEDIA COVERS

TRENCH #2
(70 PAIR) OF 8'-0" FILTER SUPPORTS SECTIONS
(1 PAIR) OF 1'-6" FILTER SUPPORT SECTIONS
TOTAL = 561'-6"
(141) 48" X-TEX FILTER MEDIA COVERS

CATCH BASIN #1
(1 PAIR) OF 4'-0" FILTER SUPPORTS SECTIONS
TOTAL = 4'-0"
(1) 48" X-TEX FILTER MEDIA COVERS

CATCH BASIN #2
(1 PAIR) OF 4'-0" FILTER SUPPORTS SECTIONS
TOTAL = 4'-0"
(1) 48" X-TEX FILTER MEDIA COVERS

FOR APPROVAL

NOTE:
ONE REPLACEMENT SET OF X-TEX
FILTER MEDIA COVERS PROVIDED FOR PROJECT

REV	DESCRIPTION	BY	DATE
3	REVISED DETAILS - ISSUED FOR APPROVAL	M.M.P.	05/13/11
2	REVISED DETAILS AND NOTES - ISSUED FOR APPROVAL	M.M.P.	05/13/11
1	REVISED NOTES ON DETAILS - ISSUED FOR APPROVAL	M.M.P.	05/10/11
REV	DESCRIPTION	DRAWN BY	DATE

Pier 29 Container Yard - Filter System
Honolulu, Hawaii

M.M.P. | S.F.D. | NONE | 05/10/11 | D- | FF311001